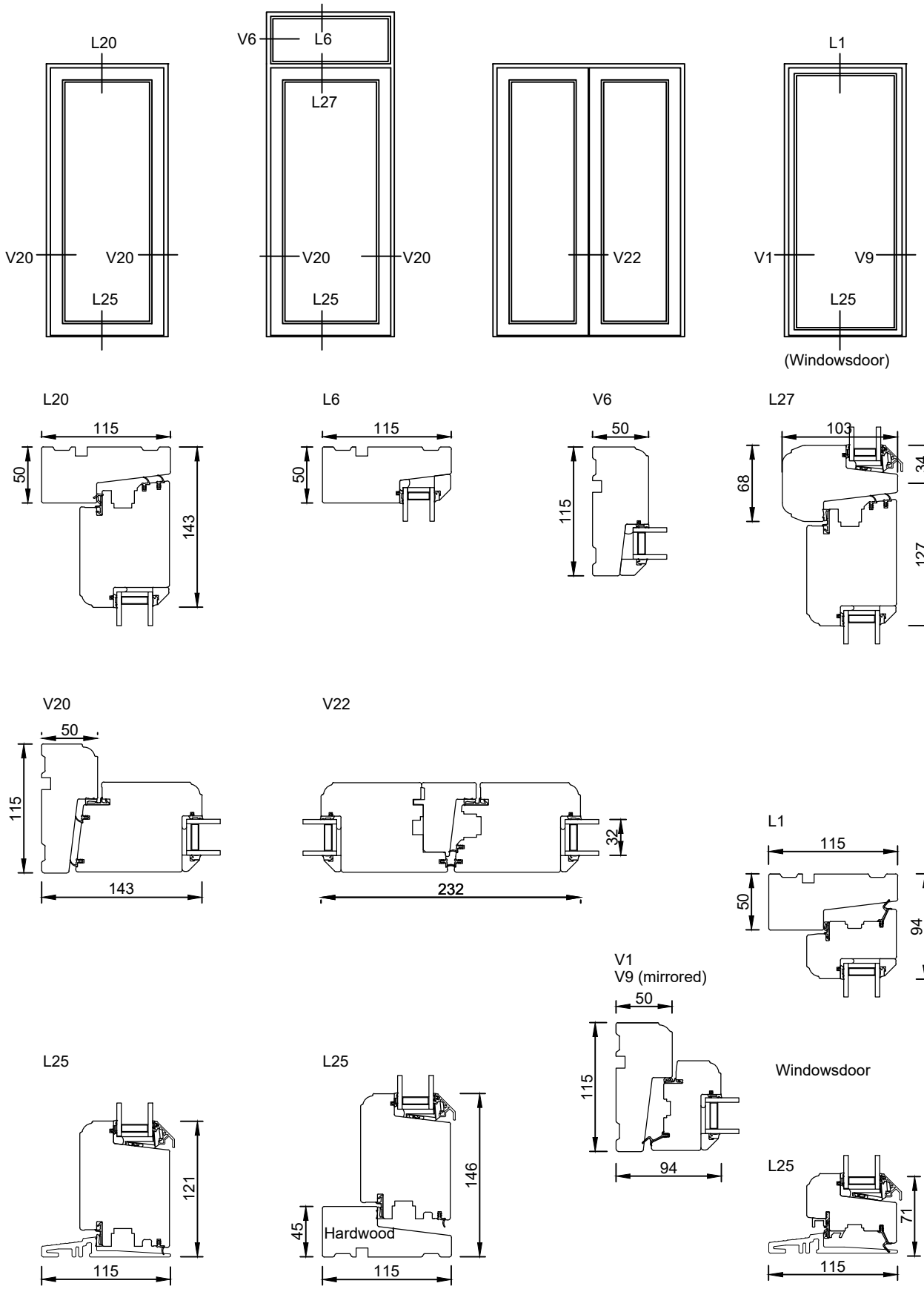


| | | |
|---|---|---|
| rationel<br>RATIONEL is a trademark of DOVISTA A/S | Rationel FORMA 2-LAYER<br>OUTWARD OPENING DOOR<br>UDADGÅENDE DØR | 01.21 © 2019, 2021<br>Scale: 1:5 |

© DOVISTA A/S, CVR-nr. 21147583. All intellectual property rights, copyright as well as all rights in know-how vest in DOVISTA A/S. This drawing may not be reproduced, stored, or transmitted in any form by any means (electronic, mechanical, photocopying, recording or otherwise) without the prior written consent of DOVISTA A/S. This drawing is to be used only for the purposes specified by DOVISTA A/S and for no other purpose. We reserve all rights to change the product and products range without notice.